* 0000800000001 *

Cambridge Assessment International Education

Cambridge International AS & A Level

CANDIDATE NAME

CENTRE NUMBER

CANDIDATE NUMBER

* 3 6 7 4 2 1 6 4 1 3 *

PHYSICS **9702/31**

Paper 3 Advanced Practical Skills 1 **October/November 2024**

2 hours

You must answer on the question paper.

You will need: The materials and apparatus listed in the confidential instructions

INSTRUCTIONS

- Answer **all** questions.
- Use a black or dark blue pen. You may use an HB pencil for any diagrams or graphs.
- Write your name, centre number and candidate number in the boxes at the top of the page.
- Write your answer to each question in the space provided.
- Do **not** use an erasable pen or correction fluid.
- Do **not** write on any bar codes.
- You will be allowed to work with the apparatus for a maximum of 1 hour for each question.
- You should record all your observations in the spaces provided in the question paper as soon as these observations are made.
- You may use a calculator.
- You should show all your working and use appropriate units.

INFORMATION

- The total mark for this paper is 40.
- The number of marks for each question or part question is shown in brackets [ ].

For Examiner's Use	
1	
2	
Total	

This document has **16** pages. Any blank pages are indicated.

© UCLES 2024

[Turn over

You may not need to use all of the materials provided.

1 In this experiment, you will investigate the equilibrium position of a wooden strip.

Some of the apparatus has been set up for you.

(a) • Set up the apparatus as shown in Fig. 1.1.

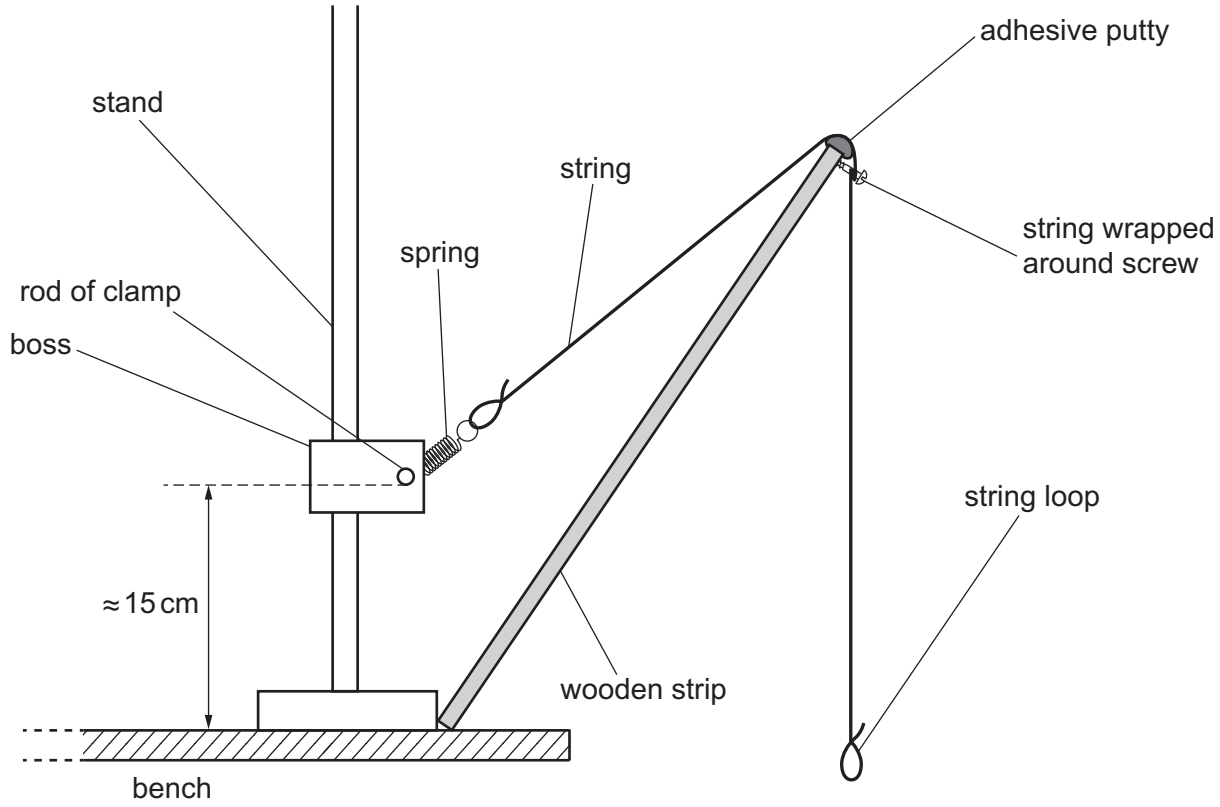

Fig. 1.1

- Ensure the rod of the clamp is approximately 15 cm above the bench.
- Arrange the wooden strip so that the bottom of the strip rests against the base of the stand.
- Use adhesive putty to fix the string centrally on the wooden strip in line with the spring.
- Wrap the string around the screw.

DO NOT WRITE IN THIS MARGIN
DO NOT WRITE IN THIS MARGIN
DO NOT WRITE IN THIS MARGIN
DO NOT WRITE IN THIS MARGIN
DO NOT WRITE IN THIS MARGIN

- Arrange the block and protractor as shown in Fig. 1.2.

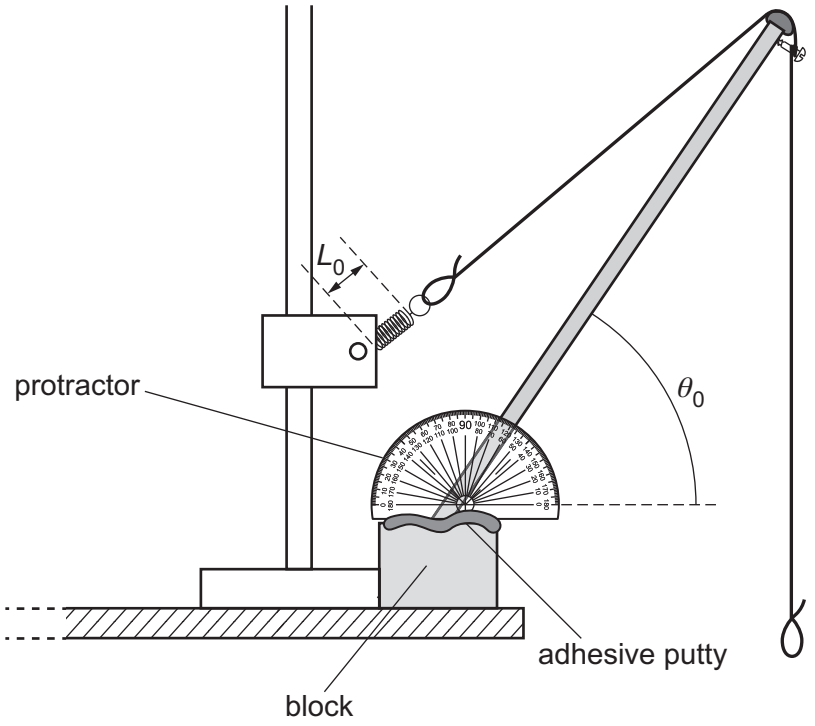

Fig. 1.2

- The length of the coiled section of the spring is L_0, as shown in Fig. 1.2.

  The angle between the lower edge of the wooden strip and the horizontal is θ_0, as shown in Fig. 1.2.

  Adjust the apparatus until θ_0 is between 75° and 85°. You may wish to move the protractor along the block.

- Measure and record L_0 and θ_0.

L_0 = ...

θ_0 = ... °

[1]

DO NOT WRITE IN THIS MARGIN
DO NOT WRITE IN THIS MARGIN
DO NOT WRITE IN THIS MARGIN
DO NOT WRITE IN THIS MARGIN
DO NOT WRITE IN THIS MARGIN

(b) • Make a hook from one paper clip and hang nine paper clips from it as shown in Fig. 1.3.

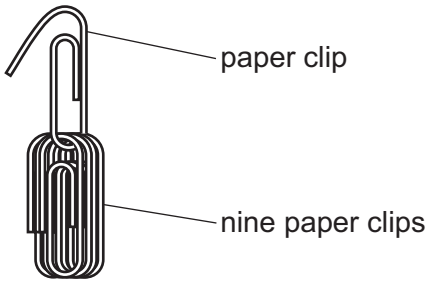

Fig. 1.3

• The mass of all ten paper clips is *m*.

Measure and record *m*.

m = ... [1]

(c) • Using the mass hanger and slotted masses, hang a mass of 40 g from the string loop.

• Hang the paper clips from the string loop as shown in Fig. 1.4.

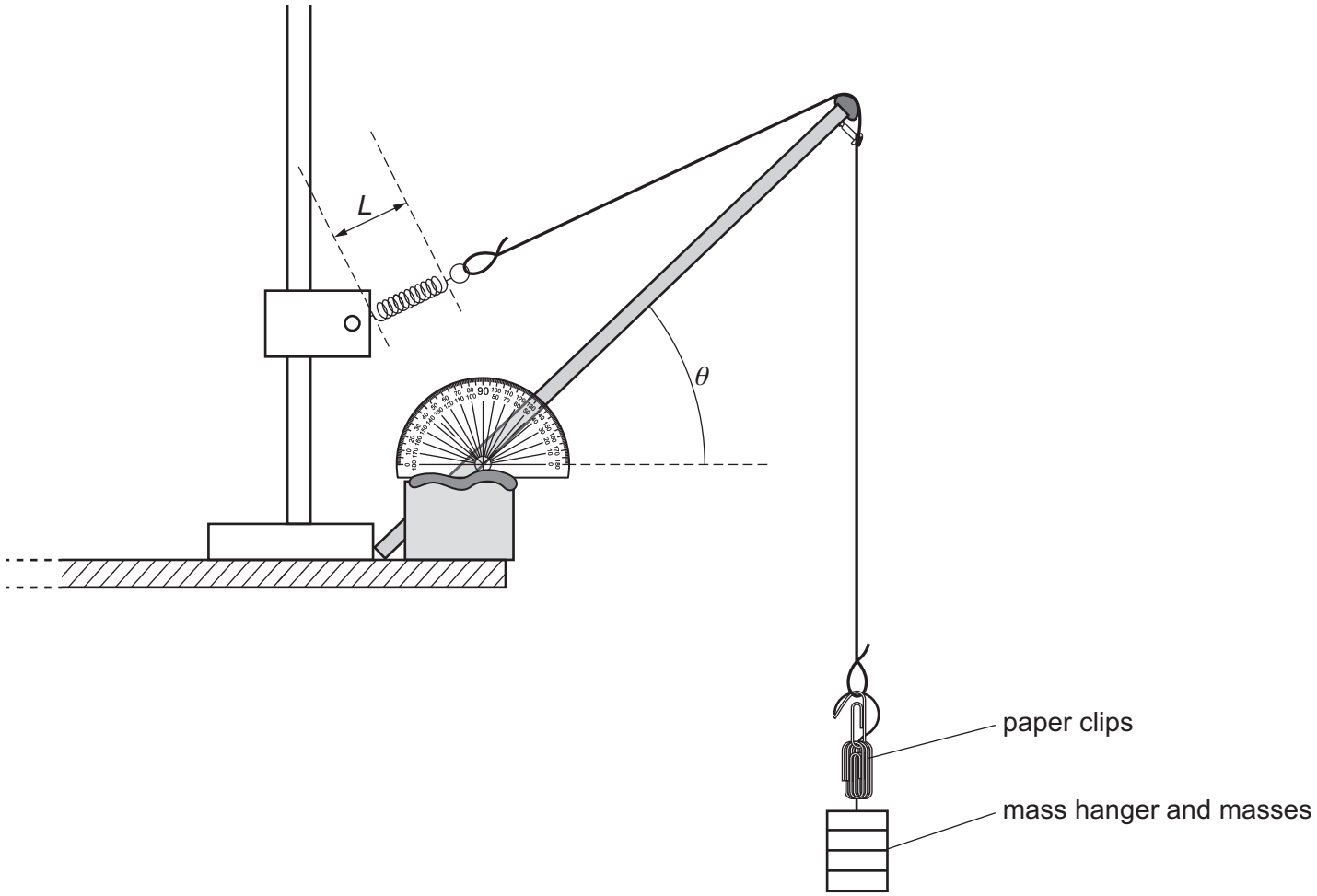

Fig. 1.4

DO NOT WRITE IN THIS MARGIN
DO NOT WRITE IN THIS MARGIN
DO NOT WRITE IN THIS MARGIN
DO NOT WRITE IN THIS MARGIN
DO NOT WRITE IN THIS MARGIN

DO NOT WRITE IN THIS MARGIN
DO NOT WRITE IN THIS MARGIN
DO NOT WRITE IN THIS MARGIN
DO NOT WRITE IN THIS MARGIN
DO NOT WRITE IN THIS MARGIN

- The total mass hanging from the string loop is M.

  The angle between the wooden strip and the horizontal is θ, as shown in Fig. 1.4.

  The length of the coiled section of the spring is L, as shown in Fig. 1.4.

  Determine and record M.

  M = ...

- Measure and record θ and L.

  θ = ... °

  L = ...

- Calculate e where

  $e = (L - L_0)$.

  e = ...
  [1]

(d) Vary M. The total mass M may be made from slotted masses only or from m and slotted masses. For each value of M, measure and record M, θ and L. Repeat until you have six sets of values.

Record your results in a table. Include values of e and $\sin\theta$ in your table.

[9]

(e) (i) Plot a graph of e on the y-axis against $\sin\theta$ on the x-axis. [3]

(ii) Draw the straight line of best fit. [1]

(iii) Determine the gradient and y-intercept of this line.

gradient = ...

y-intercept = ...

[2]

DO NOT WRITE IN THIS MARGIN

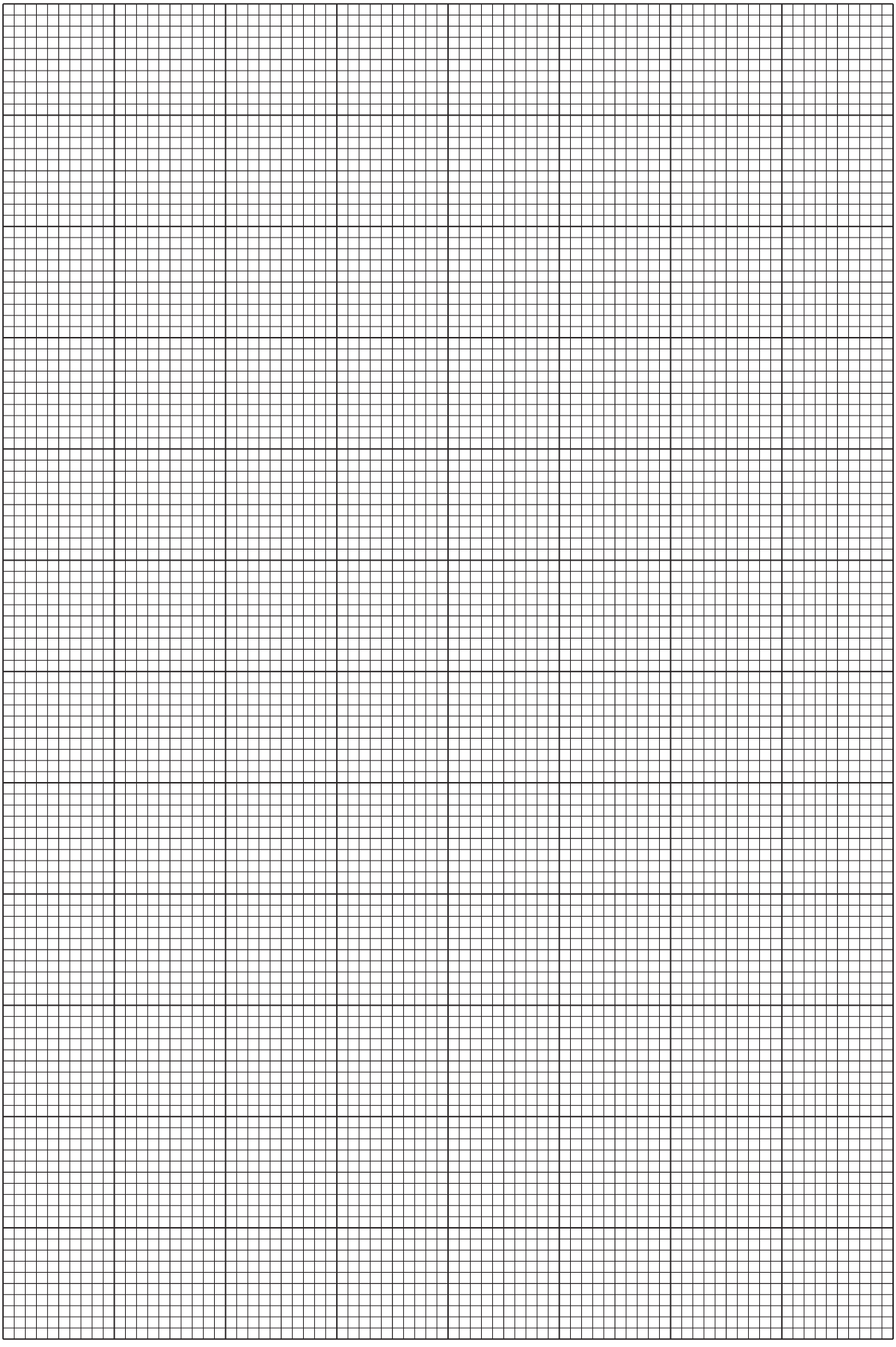

DO NOT WRITE IN THIS MARGIN
DO NOT WRITE IN THIS MARGIN
DO NOT WRITE IN THIS MARGIN
DO NOT WRITE IN THIS MARGIN
DO NOT WRITE IN THIS MARGIN

(f) It is suggested that the quantities e and θ are related by the equation

$$e = P\sin\theta + Q$$

where P and Q are constants.

Using your answers in **(e)(iii)**, determine the values of P and Q.
Give appropriate units.

P = ...

Q = ...
[2]

[Total: 20]

DO NOT WRITE IN THIS MARGIN
DO NOT WRITE IN THIS MARGIN
DO NOT WRITE IN THIS MARGIN
DO NOT WRITE IN THIS MARGIN
DO NOT WRITE IN THIS MARGIN

BLANK PAGE

DO NOT WRITE IN THIS MARGIN
DO NOT WRITE IN THIS MARGIN
DO NOT WRITE IN THIS MARGIN
DO NOT WRITE IN THIS MARGIN
DO NOT WRITE IN THIS MARGIN

You may not need to use all of the materials provided.

2 In this experiment, you will investigate oscillations.

(a) You have been provided with a board of width *w* and thickness *x*, as shown in Fig. 2.1.

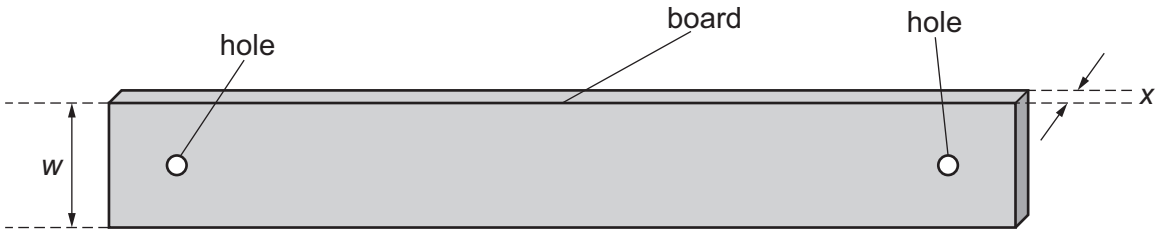

Fig. 2.1 (not to scale)

Measure and record *w* and *x*.

w = ...

x = ...
[1]

(b) (i) • Set up the apparatus as shown in Fig. 2.2.

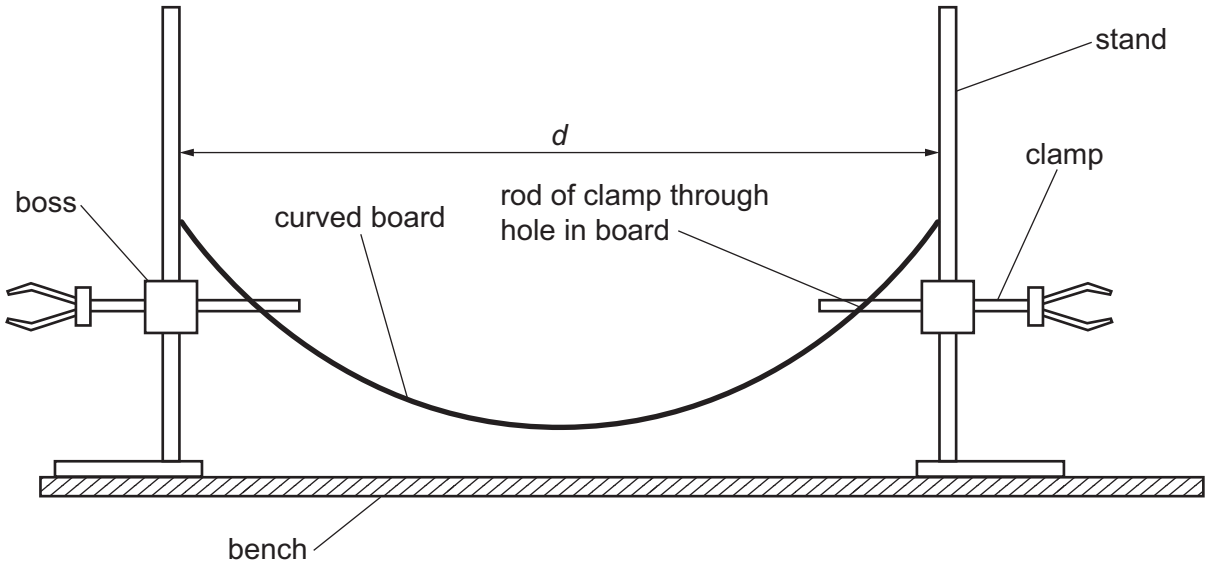

Fig. 2.2

- Ensure the rods of the clamps are the same height above the bench.
- Slide the rods of the clamps through the holes in the board as shown in Fig. 2.2. Ensure that each end of the board touches a stand.

DO NOT WRITE IN THIS MARGIN
DO NOT WRITE IN THIS MARGIN
DO NOT WRITE IN THIS MARGIN
DO NOT WRITE IN THIS MARGIN
DO NOT WRITE IN THIS MARGIN

- The distance between the inside edges of the stands is d, as shown in Fig. 2.2.

  Adjust the apparatus until d is in the range 92 cm to 99 cm.

- Measure and record d.

d = ... cm [2]

(ii) Estimate the percentage uncertainty in your value of d. Show your working.

percentage uncertainty = ...% [1]

(c) • Place the spring in the middle of the curved board.

- Displace the spring a short distance to one side, as shown in Fig. 2.3.

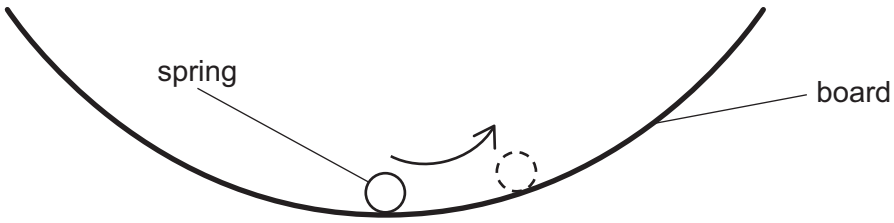

Fig. 2.3

- Release the spring. The spring will roll from side to side on the board.
- Take measurements to determine the period T of these oscillations.

T = ... s [2]

DO NOT WRITE IN THIS MARGIN
DO NOT WRITE IN THIS MARGIN
DO NOT WRITE IN THIS MARGIN
DO NOT WRITE IN THIS MARGIN
DO NOT WRITE IN THIS MARGIN

(d) • Adjust the apparatus until d is in the range 66 cm to 74 cm. Ensure that the board does not touch the bench.

• Measure and record d.

d = ... cm

• Repeat **(c)**.

T = ... s
[3]

(e) It is suggested that the relationship between T and d is

$$(T - a) = kd$$

where a is 0.70 s and k is a constant.

(i) Using your data, calculate two values of k.

first value of k = ...

second value of k = ...
[1]

(ii) Justify the number of significant figures that you have given for your values of k.

.....

.....

..... [1]

DO NOT WRITE IN THIS MARGIN

(f) It is suggested that the percentage uncertainty in the values of k is 10%.

Using this uncertainty, explain whether your results support the relationship in **(e)**.

.....

.....

.....

..... [1]

DO NOT WRITE IN THIS MARGIN
DO NOT WRITE IN THIS MARGIN
DO NOT WRITE IN THIS MARGIN
DO NOT WRITE IN THIS MARGIN
DO NOT WRITE IN THIS MARGIN

(g) (i) Describe **four** sources of uncertainty or limitations of the procedure for this experiment.

For any uncertainties in measurement that you describe, you should state the quantity being measured and a reason for the uncertainty.

1 .....

.....

2 .....

.....

3 .....

.....

4 .....

.....

[4]

(ii) Describe **four** improvements that could be made to this experiment. You may suggest the use of other apparatus or different procedures.

1 .....

.....

2 .....

.....

3 .....

.....

4 .....

.....

[4]

[Total: 20]

DO NOT WRITE IN THIS MARGIN
DO NOT WRITE IN THIS MARGIN
DO NOT WRITE IN THIS MARGIN
DO NOT WRITE IN THIS MARGIN
DO NOT WRITE IN THIS MARGIN

BLANK PAGE

DO NOT WRITE IN THIS MARGIN
DO NOT WRITE IN THIS MARGIN
DO NOT WRITE IN THIS MARGIN
DO NOT WRITE IN THIS MARGIN
DO NOT WRITE IN THIS MARGIN

BLANK PAGE

DO NOT WRITE IN THIS MARGIN
DO NOT WRITE IN THIS MARGIN
DO NOT WRITE IN THIS MARGIN
DO NOT WRITE IN THIS MARGIN
DO NOT WRITE IN THIS MARGIN

Permission to reproduce items where third-party owned material protected by copyright is included has been sought and cleared where possible. Every reasonable effort has been made by the publisher (UCLES) to trace copyright holders, but if any items requiring clearance have unwittingly been included, the publisher will be pleased to make amends at the earliest possible opportunity.

To avoid the issue of disclosure of answer-related information to candidates, all copyright acknowledgements are reproduced online in the Cambridge Assessment International Education Copyright Acknowledgements Booklet. This is produced for each series of examinations and is freely available to download at www.cambridgeinternational.org after the live examination series.

Cambridge Assessment International Education is part of Cambridge Assessment. Cambridge Assessment is the brand name of the University of Cambridge Local Examinations Syndicate (UCLES), which is a department of the University of Cambridge.